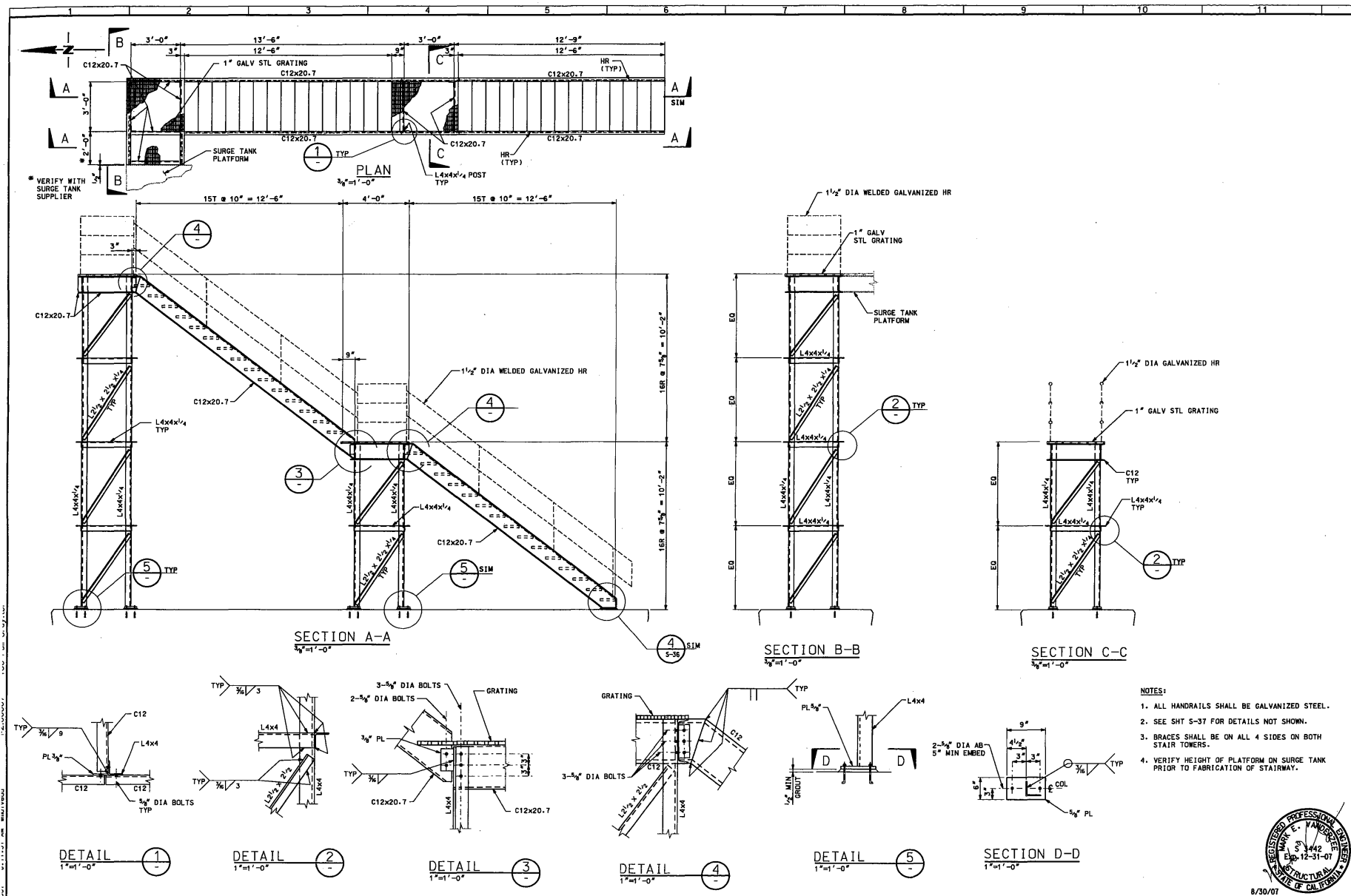

NOTES:

1. ALL HANDRAILS SHALL BE GALVANIZED STEEL.
2. SEE SHT S-37 FOR DETAILS NOT SHOWN.
3. BRACES SHALL BE ON ALL 4 SIDES ON BOTH STAIR TOWERS.
4. VERIFY HEIGHT OF PLATFORM ON SURGE TANK PRIOR TO FABRICATION OF STAIRWAY.

REGISTERED PROFESSIONAL ENGINEER MARK E. VANDERZEE S-3442 Exp. 12-31-07 STRUCTURAL STATE OF CALIFORNIA

8/30/07

WARNING 1" IF THIS LINE IS NOT 1" LONG, THEN DWG IS NOT TO SCALE.

COUNTY SANITATION DISTRICT NO. 14
OF LOS ANGELES COUNTY, CALIFORNIA

DESIGNED R. LUCERO AUG.2007
DRAWN J. RODRIGUEZ AUG.2007
CHECKED AUG.2007
REVIEWED AUG.2007

LANCASTER WATER RECLAMATION PLANT
STAGE FIVE
RECYCLED WATER PUMP STATION AND STORAGE FACILITIES - PHASE I
SURGE TANK
STAIRWAY
PLAN, SECTIONS AND DETAILS

SCALE: AS NOTED
SHEET NO. S-34
DWG. NO. 14-g-65

R:\LN\14G65\s\14g65_s34.dgn