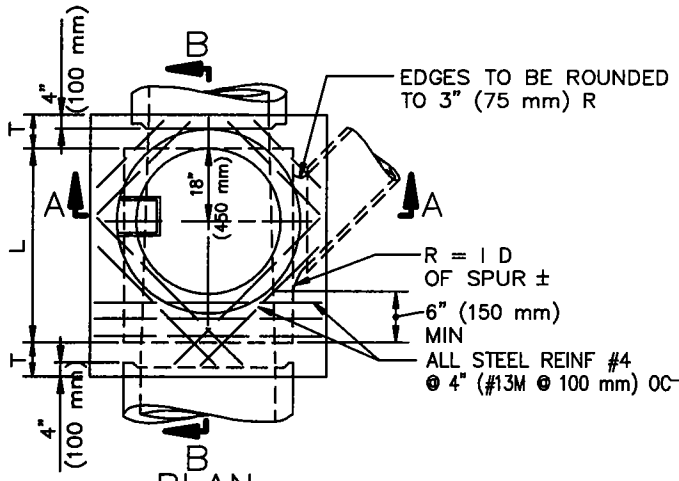

PLAN

(SHAFT NOT SHOWN)

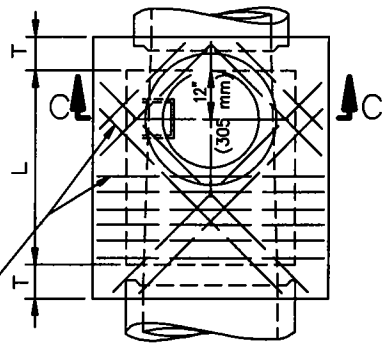

DETAIL "N" PLAN

(RINGS AND COVER NOT SHOWN)

SEE NOTE 1

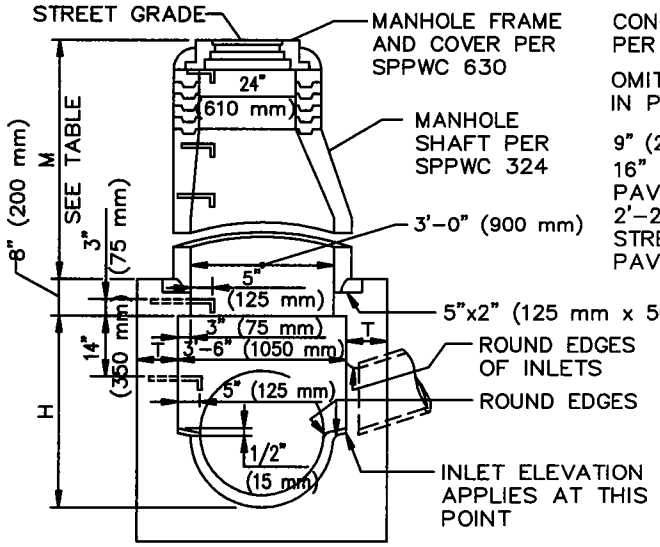

SECTION A–A

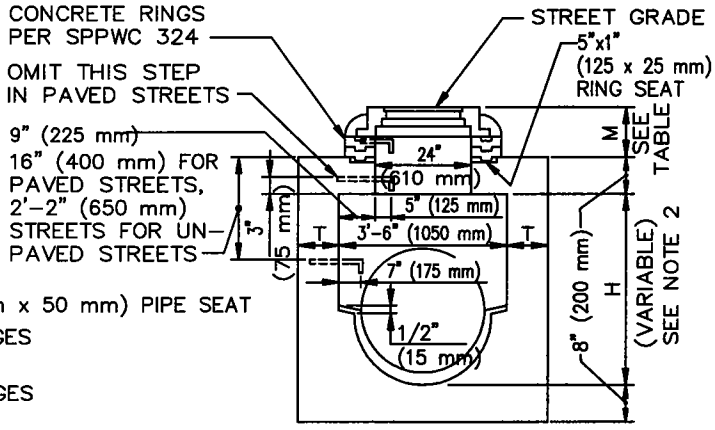

SECTION C–C

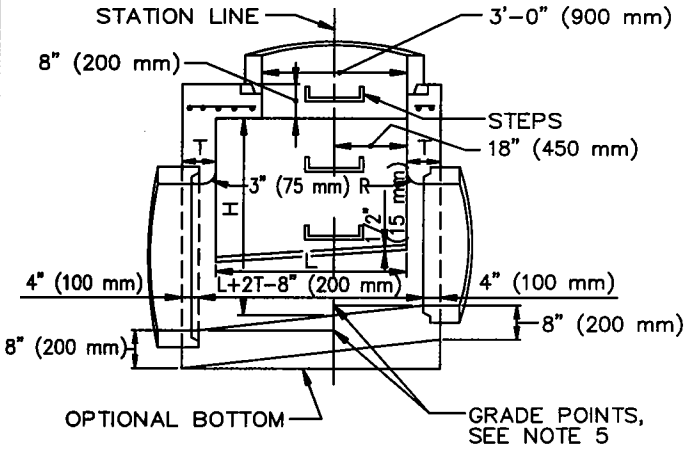

SECTION B–B

TABLE OF VALUES FOR M (SEE NOTE 1)				
SECTION	PAVED STREET		UNPAVED STREET	
	MAX	MIN	MAX	MIN
A–A		2'-10 1/2" (867 mm)		3'-6" (1060 mm)
C–C	11" (282 mm)	8 1/2" (217 mm)	16" (410 mm)	15" (380 mm)

STANDARD PLANS FOR PUBLIC WORKS CONSTRUCTION

PROMULGATED BY THE PUBLIC WORKS STANDARDS INC. GREENBOOK COMMITTEE 1992 REV. 1996, 2009

MANHOLE PIPE–TO–PIPE (ONE OR BOTH MAIN LINE IDS 33" (825 mm) OR SMALLER)

USE WITH STANDARD SPECIFICATIONS FOR PUBLIC WORKS CONSTRUCTION

STANDARD PLAN

321–2

SHEET 1 OF 3