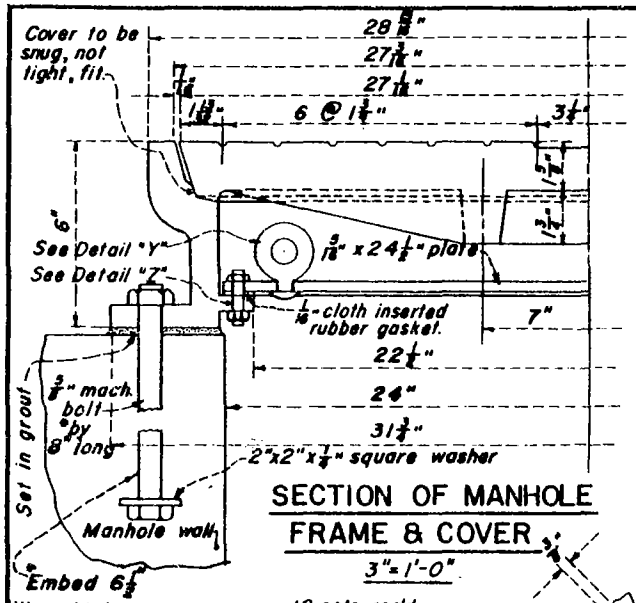

SECTION OF MANHOLE FRAME & COVER

3" = 1'-0"

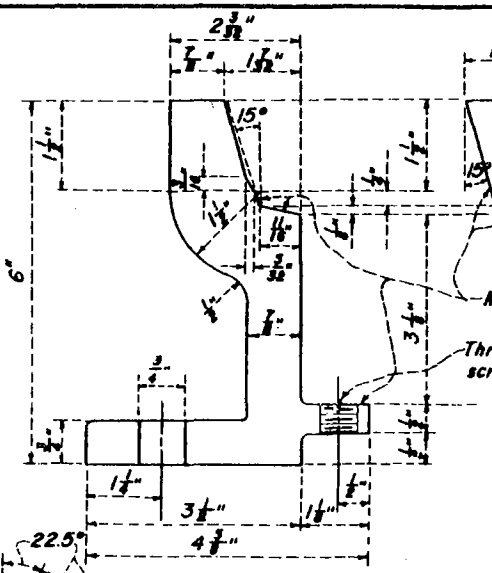

SECTION A-A

Half Size

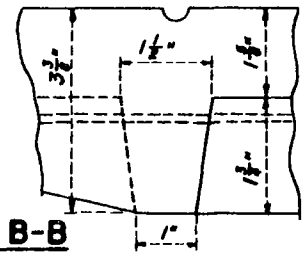

SECTION B-B

Half Size

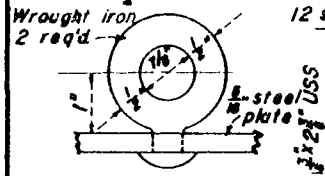

DETAIL "Y"

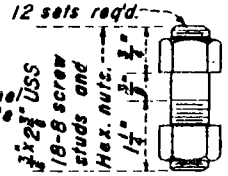

DETAIL "Z"

Half Size

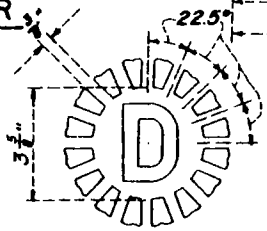

LETTER DETAIL (3" = 1'-0")

NOTES:

1. MANHOLE FRAME AND COVER SHALL BE MADE OF GRAY CAST IRON CONFORMING TO THE LATEST A.S.T.M. STANDARD A48, CLASS 30 OR BETTER. PRESSURE PLATE SHALL BE STEEL.
2. ALL PARTS OF THE MANHOLE FRAME AND COVER EXCEPT MACHINED SURFACES SHALL BE COATED WITH ASPHALTUM PAINT.
3. MANHOLE FRAME AND COVER SHALL BE TESTED FOR ACCURACY OF FIT AND SHALL BE MARKED IN SETS BEFORE DELIVERY. THE COVER SHALL FIT THE FRAME SNUGLY BUT NOT TIGHTLY.
4. COVERS SHALL BEAR THE LETTER "D" FOR STORM DRAIN STRUCTURES.
5. WEIGHTS OF FRAME, COVER, AND PRESSURE PLATE SHALL NOT VARY MORE THAN TWO PERCENT FROM THOSE GIVEN HEREON.
6. ☐ WHERE A MANHOLE SHAFT IS REQUIRED IT SHALL BE A STANDARD PRESSURE MANHOLE SHAFT PER STANDARD DRAWING 2-D210.
7. ☐ THIS MANHOLE FRAME AND COVER MAY BE USED FOR HYDROSTATIC HEADS UP TO 25 FEET ABOVE STEEL PLATE.
8. COVERS FOR MANHOLES LOCATED IN EASEMENTS, ALLEYS, PARKWAYS AND ALL OTHER PLACES EXCEPT PAVED STREETS SHALL BE PROVIDED WITH ALLEN SOCKET SET SCREW LOCKING DEVICES. THE CONTRACTOR SHALL DRILL AND TAP TWO HOLES TO A DEPTH OF 1 INCH AT 90 DEGREES TO PICK HOLE AND INSTALL 3/4-BY-3/4-INCH ALLEN SOCKET SET SCREWS.

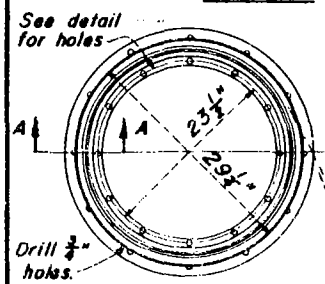

FRAME-PLAN

Weight 195 Lbs.

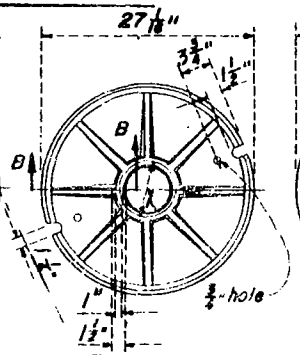

COVER-BOTTOM

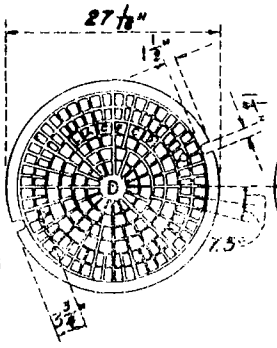

COVER-TOP

△ Weight 175 Lbs.

3/4" = 1'-0"

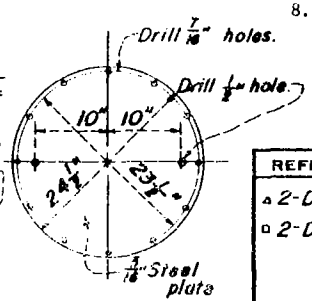

PRESSURE PLATE

Weight 42 Lbs.

REFERENCES	REVISIONS		
△ 2-D210	MARK	DATE	DESCRIPTION
☐ 2-D295.1 to.3	△	10-54	Added note.
	○	10-55	Changed bolt size.
	✱	4-60	Added dimensions
	☐	2-63	Revised Note 6 & added Note 7.
	△	2-75	Changed M.H. cover weight.

LOS ANGELES COUNTY FLOOD CONTROL DISTRICT

STANDARD PRESSURE MANHOLE FRAME & COVER

APPROVED BY [signature] CHIEF ENGINEER

SUBMITTED BY [signature]

RECOMMENDED BY [signature] DIVISION ENGINEER (DESIGN)

SCALE	DATE	NO.
A.S.	4-54	2-D197

SHEET 1 OF 1