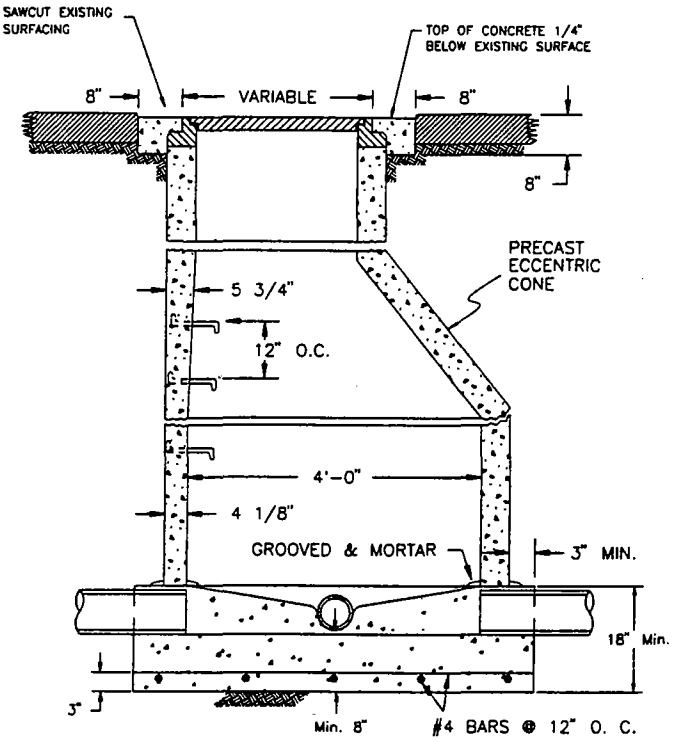

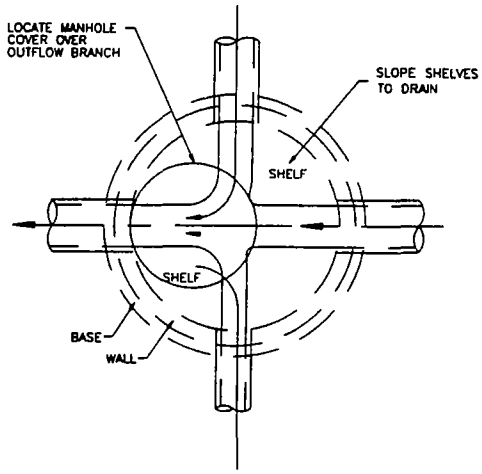

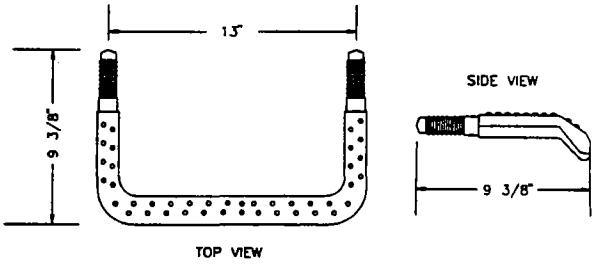

MANHOLE STEP DETAIL

(POLYPROPYLENE STEP WITH 1/2" INTERNAL STEEL BAR)

General Notes

1. Manhole steps are required and shall be standard polypropylene steps. The top step shall be no more than 34" below finish street grade and no less than 20" below the top of the eccentric manhole cone. The bottom step shall be 10" to 20" above the manhole floor. Steps shall be 12" on center and shall be in vertical alignment over outgoing sewer.

2. Structural backfill impervious material @ 95% relative compaction.

3. All concrete shall be Class A minimum.

4. Manhole height shall be field verified prior to construction.

PLOTTED: 08/18/1995

ACAD FILE #23\S-5

Revisions Date	Desc	DATE: 8-18-1995	COUNTY OF KERN STATE OF CALIFORNIA DEVELOPMENT STANDARD	STANDARD PRECAST MANHOLE	PLATE NO.
		DESIGNED BY:			
		DRAWN BY: S. LUNA			S-5
		CHECKED BY:			