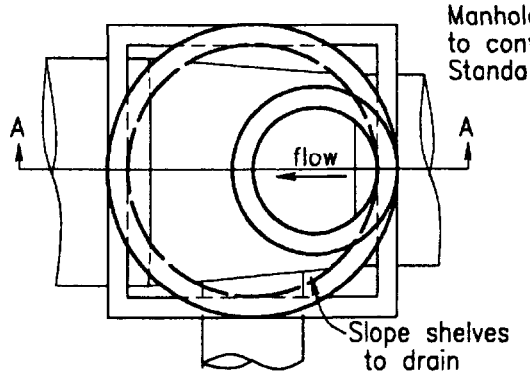

Plan

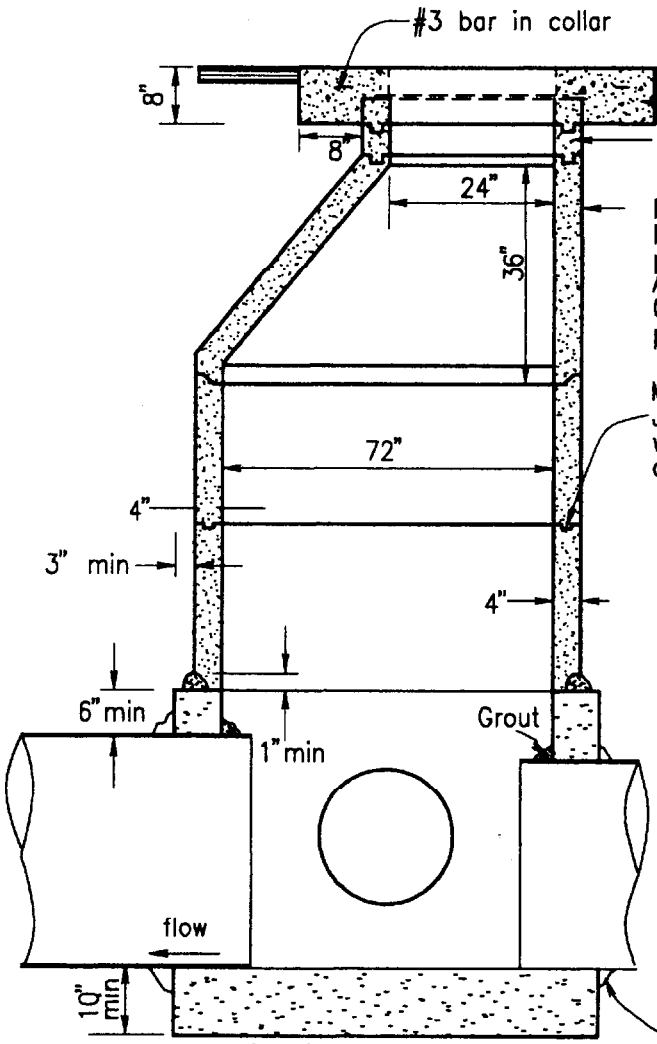

Section A – A

Pavement
Concrete Collar
3" or 6" Riser Ring (9" Maximum)

Precast Concrete (Typical) Manhole walls shall be a precast type conforming to ASTM Std. C478–61T for Class 2 reinforced concrete pipe.

Manholes shall be watertight. Joints to be set in a watertight mastic sealant approved by the Director

Broken or chipped rings and cones shall not be used, except with approval of the Director.

Manhole base shall be a minimum of 10" with Class "A" concrete. Channel shall be a steel trowel finish and shelf areas shall be a broom finish. Base shall be monolithically placed.

Large Diameter Pipe for Pipelines exceeding 36" diameter.

Approved:

29 JUNE 07
Director of Public Works/ Designee

29 June 07
R. James Garing, RCE 26993
City Engineer

REGISTERED PROFESSIONAL ENGINEER
R. JAMES GARING
No. 26993
Exp. 3-31-09
CIVIL
STATE OF CALIFORNIA

City of Grover Beach

Typical Manhole 72"

D.17