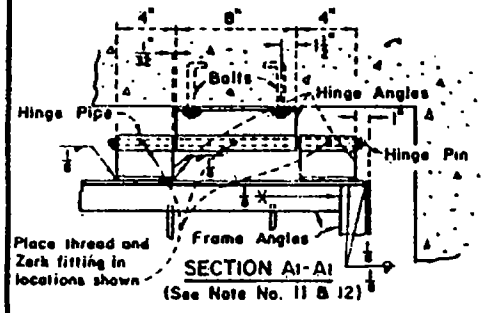

SECTION A1-A1
(See Note No. 11 & 12)

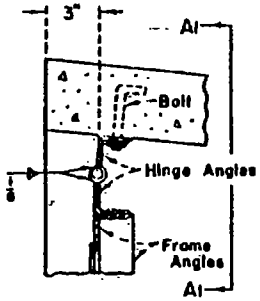

DETAIL A
(See Note No. 12)

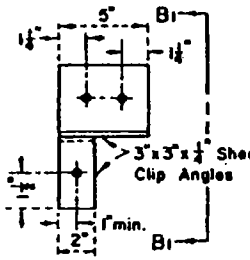

DETAIL B

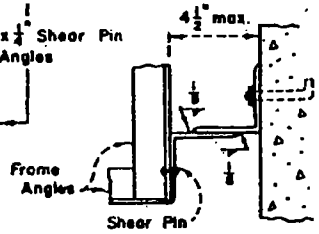

SECTION B1-B1

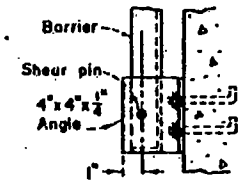

SECTION E-E
(See ELEVATION, Sheet 2)
for pipe only

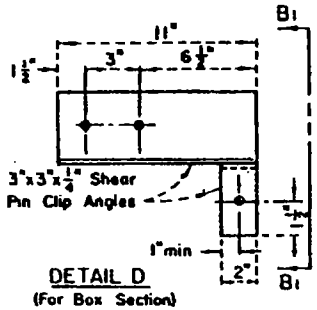

DETAIL D
(For Box Section)

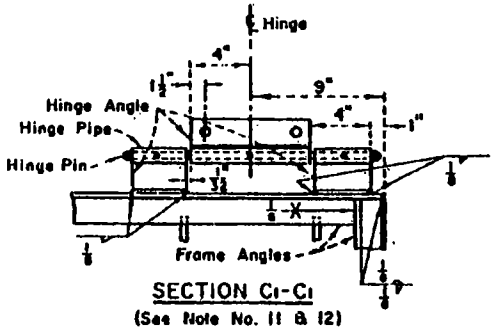

SECTION C1-C1
(See Note No. 11 & 12)

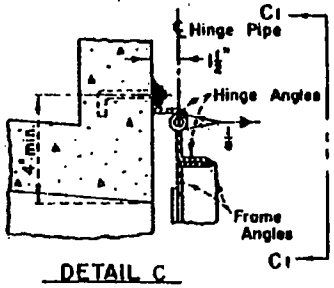

DETAIL C

GENERAL NOTES:

1. Angles connected with shear pins shall fit snugly and truly face to face.
2. The shear pin holes shall be drilled so as to provide a tight fit with the shear pins in place.
3. All shear pins shall be peened on both ends after installation.
4. The aluminum shear pin material will be furnished by the District to the Contractor.
5. All 5/8-inch diameter bolt holes shall be drilled on the gage lines of the angles.
6. All bolts shall be 5/8-inch in diameter embedded a minimum of 4 inches into concrete, or equivalent expansion bolts, and shall be furnished with hex nuts and metallic washers at least 3/32-inch thick.
7. Frame, brace, and hinge angles shall have the outstanding legs facing in the direction of flow for both inlets and outlets, see Section sheet 2.
8. Thread ends of hinge pin so that nuts and lock washers will be flush with the hinge angle. Damage threads beyond the nut face. Use bolt stock for pin.
9. Galvanize all ferrous parts after fabrication.
10. Cover all movable contact surfaces with a coat of waterproof grease prior to installation.
11. For barriers 36 inches and less in width, use one hinge the full width of barrier.
12. If the barrier width exceeds 12 feet, provide an additional hinge on the centerline of the barrier.
13. For barriers exceeding 6 feet in height or width, use brace angles evenly spaced at a maximum of 6 feet on center.
14. Shear pin material shall be commercially pure aluminum wire, alloy 1100, temper O, Federal Specification QQ-A-411.
15. Refer to part J of the specifications for additional requirements and material specifications

Barrier No.	Frame Angles	Brace Angles	Shear Pins	Inlet Hinge Angles		Outlet Hinge Angles	Hinge	
				Upper	Lower		Std. Pipe	Pin
1	2"x2"x1/4"	2"x2"x1/4"	1/8" ϕ	2"x2"x1/4"	2"x2"x1/4"	2"x2"x1/4"	⊡3/4" ϕ	1/2" ϕ
2	3"x3"x7/16"	2"x2"x1/4"	1/8" ϕ	2 1/2"x2 1/2"x1/4"	2 1/2"x2 1/2"x1/4"	2 1/2"x2 1/2"x1/4"	⊡1" ϕ	3/4" ϕ
3	4"x4"x5/8"	2"x2"x3/8"	3/16" ϕ	3"x3"x3/8"	3"x3"x3/8"	3"x3"x3/8"	⊡1 1/4" ϕ	1" ϕ
4	5"x5"x7/16"	2 1/2"x2 1/2"x1/4"	1/4" ϕ	5"x5"x1/2"	3"x3"x7/16"	3"x3"x1/2"	⊡1 1/2" ϕ	1 1/4" ϕ

SAN BERNARDINO COUNTY
FLOOD CONTROL DISTRICT

REVISIONS	DWN. BY	DATE
	K.J.K.	11-18-85
	FILE NO.	
	S.P. 101-3	