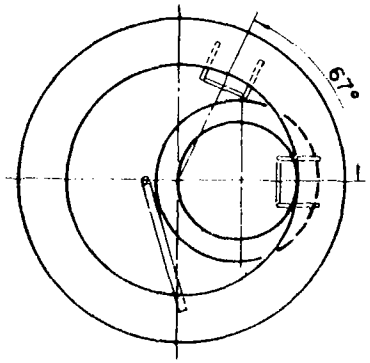

SECTION A-A

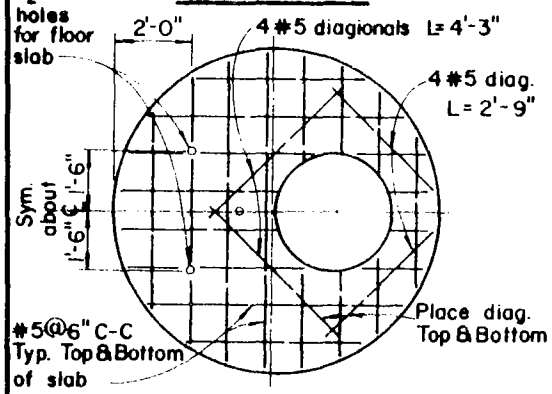

SECTION B-B

REINFORCEMENT DETAILS FOR FLOOR AND ROOF SLABS

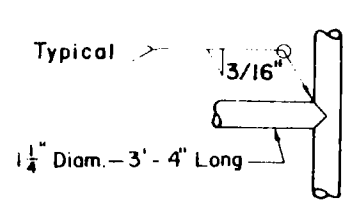

(300# REBAR)

DETAIL A - Rotated 90°

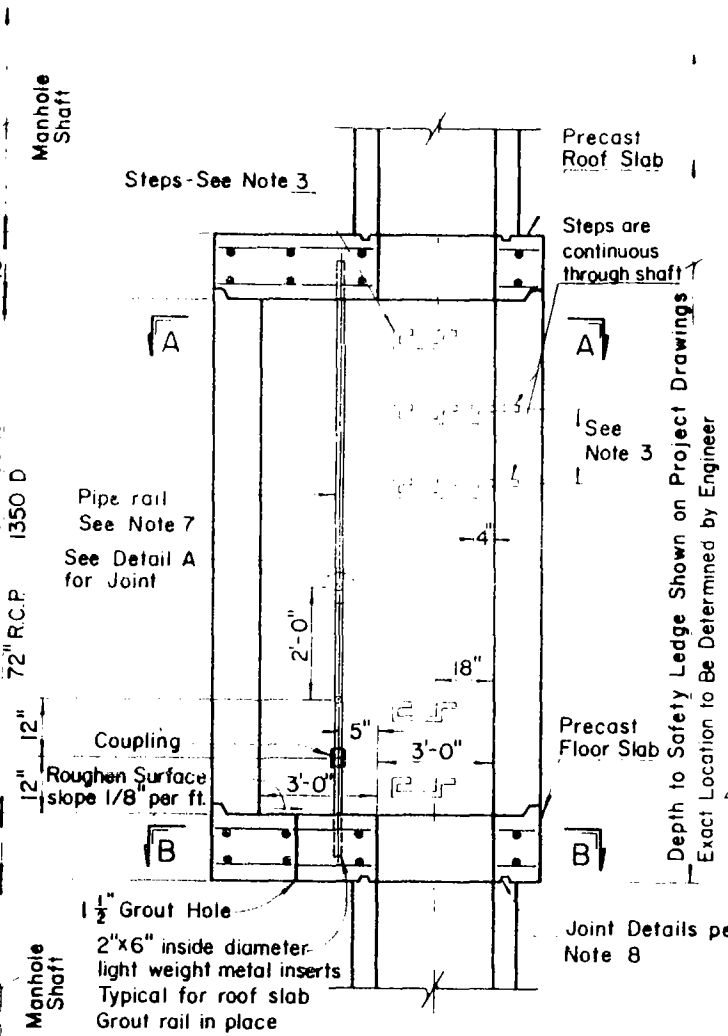

VERTICAL SECTION

NOTES

1. Manhole shaft safety ledge will be noted on the project drawings when required. Generally, it is to be constructed in deep manhole shafts 20 ft or greater in depth.
2. A safety ledge shall not be used if a pressure manhole is required.
3. Steps shall be 3/4" round galvanized steel anchored 4" in the wall of the structure. Steps shall be placed to match the spacing of the manhole shaft. See District Drawing 2-D96.
4. Concrete shall develop 3000 p.s.i. or greater in 28 days.
5. Reinforcement shall be per ASTM A615, Grade 40. Reinforcing steel shall terminate 2" clear of concrete surfaces unless otherwise shown.
6. Grout holes, pipe, and fittings shall be provided in the floor slab. Pressure grouting shall be used to fill voids and to secure uniform bearing. The grout shall be neat cement grout and grouting pressures shall be as determined in the field by the Engineer.
7. Pipe rail shall be fabricated of 1-1/4" standard galvanized pipe composed of two sections 7.5' & 1.5' in length joined by a galvanized coupling. The coupling shall be threaded a minimum of 2" on each pipe length.
8. Roof and floor slabs shall be precast and keyed for reinforced concrete pipe sections as shown. All joints shall be filled with 1-2 mortar and neatly pointed or wiped on the inside.
9. △ 72" R.C.P. shall be provided with two circular cages of reinforcement.

DRAWN BY	REVISIONS		
G.D.M.	MARK	DATE	DESCRIPTION
CHECKED BY R.J.S.	△	6-5-72	Added Note No. 9
DESIGNED BY V.C.M.			
SUBMITTED BY C.W.H.			

LOS ANGELES COUNTY FLOOD CONTROL DISTRICT

MANHOLE SHAFT SAFETY LEDGE

RECOMMENDED BY — DIVISION ENGINEER (DESIGN)
APPROVAL RECOMMENDED BY — ASS'T CHIEF DEPUTY ENGINEER
APPROVED BY — CHIEF ENGINEER — 10-26-70

SCALE	DATE	DWG. NO. 2-D430
NONE	10-23-70	SHEET 1 OF 1