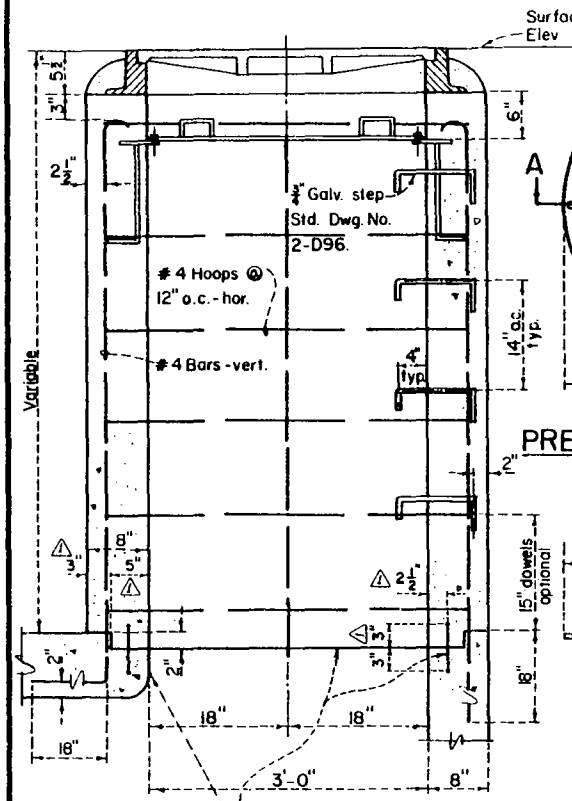

Manhole or storm drain conduit

Provide construction joint with continuous waterstop when manhole shaft is not poured monolithic with manhole or storm drain conduit

VERTICAL SECTION OF SPECIAL PRESSURE MANHOLE SHAFT

Scale: 1" = 1'-0"

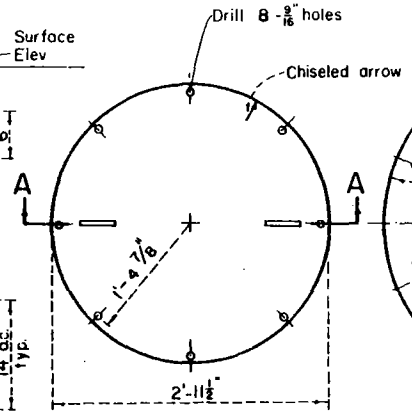

PRESSURE PLATE PLAN

Scale: 1" = 1'-0"

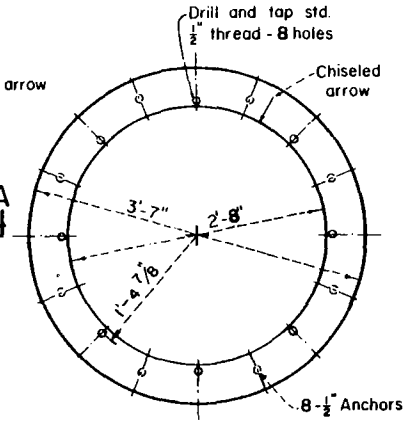

PRESSURE PLATE RING PLAN

Scale: 1" = 1'-0"

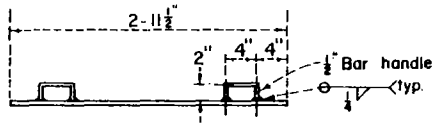

SECTION A-A

Scale: 1" = 1'-0"

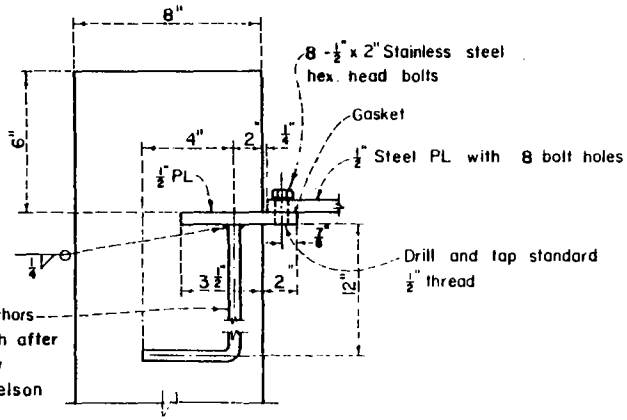

DETAIL

Scale: 3" = 1'-0"

NOTES:

1. This structure may be used for hydrostatic heads up to 25 feet above the pressure plate.
2. Where Special Pressure Manhole is specified on the storm drain plans, Special Pressure Manhole Shaft with pressure plate per this standard and Special Manhole Frame and Cover per standard drawing 2-D427 shall be used.
3. Concrete strength shall be f'_c = 3,000 p.s.i. at 28 days.
4. Gasket material shall be neoprene (or equal) 1/16" thick by 1¼" wide.
5. Reinforcement for the shaft shall be intermediate grade per ASTM A15. Hoops may be electrically butt welded or the ends lapped 18".
6. Bolts shall be stainless steel conforming to A.S.T.M. A320, Grade B8.
7. Pressure plate and pressure plate ring shall be steel conforming to ASTM A36. Plates shall be marked in sets and a chiseled arrow stamped on both plates, after drilling and tapping, to facilitate field assembly.
8. The pressure plate and pressure plate ring shall be galvanized.
9. △ See Contract Specifications for physical requirements of waterstop.

DRAWN BY	REVISIONS		
S.Y.H.	MARK	DATE	DESCRIPTION
CHECKED BY R.J.S.	△	5-18-72	Add - waterstop & Note 9.
DESIGNED BY V.M.			
SUBMITTED BY C.W.H.			

LOS ANGELES COUNTY FLOOD CONTROL DISTRICT

SPECIAL PRESSURE MANHOLE SHAFT AND PRESSURE PLATE DETAILS

RECOMMENDED BY: L. F. Eckiny, DIVISION ENGINEER DESIGN

APPROVAL RECOMMENDED BY: Milan W. Karasov, ASS'T CHIEF DEPUTY ENGINEER

APPROVED BY: Walter J. Wood 4/15/69, CHIEF ENGINEER

SCALE	DATE	DWG. NO. 2-D429
AS SHOWN	4-15-69	SHEET 1 OF 1