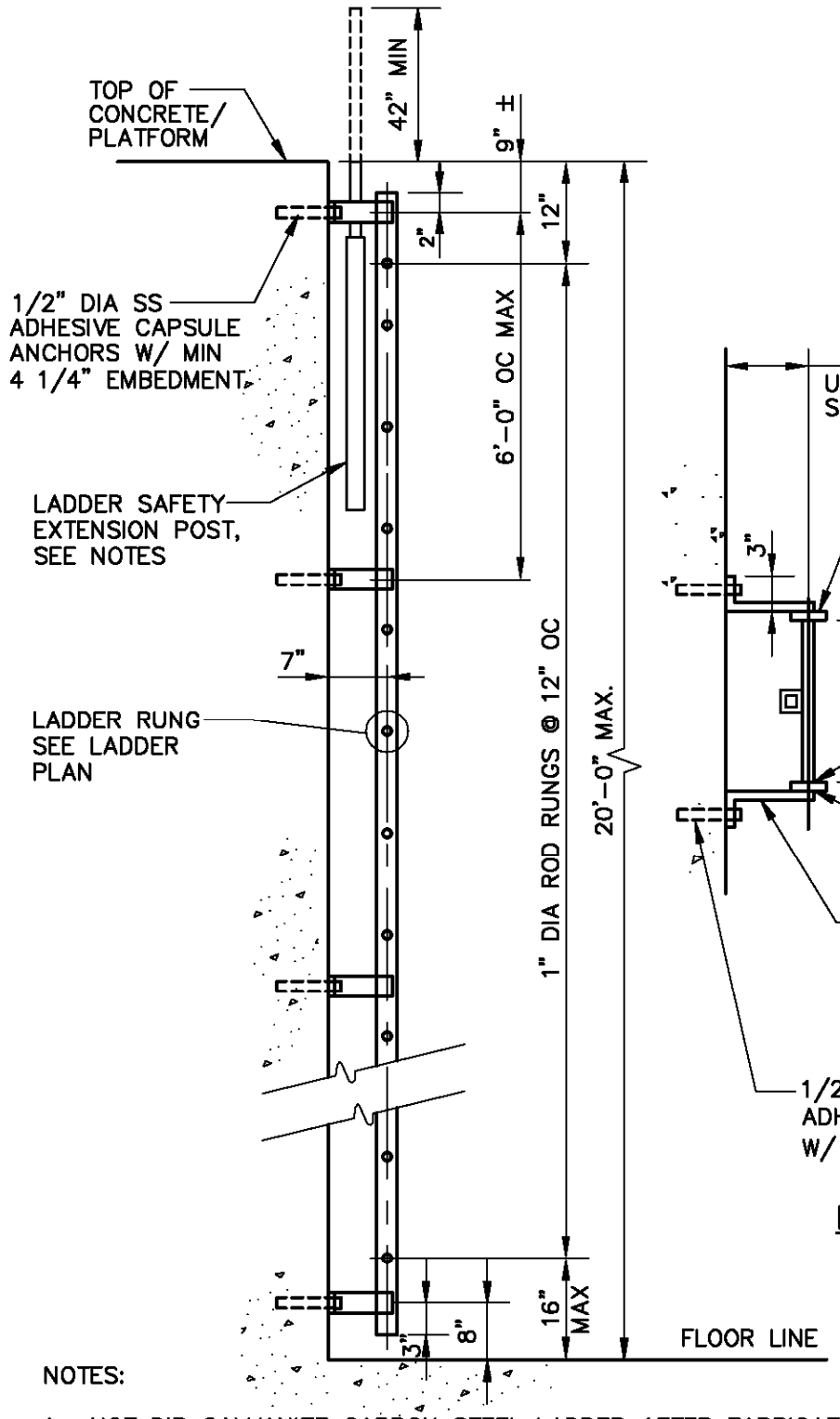

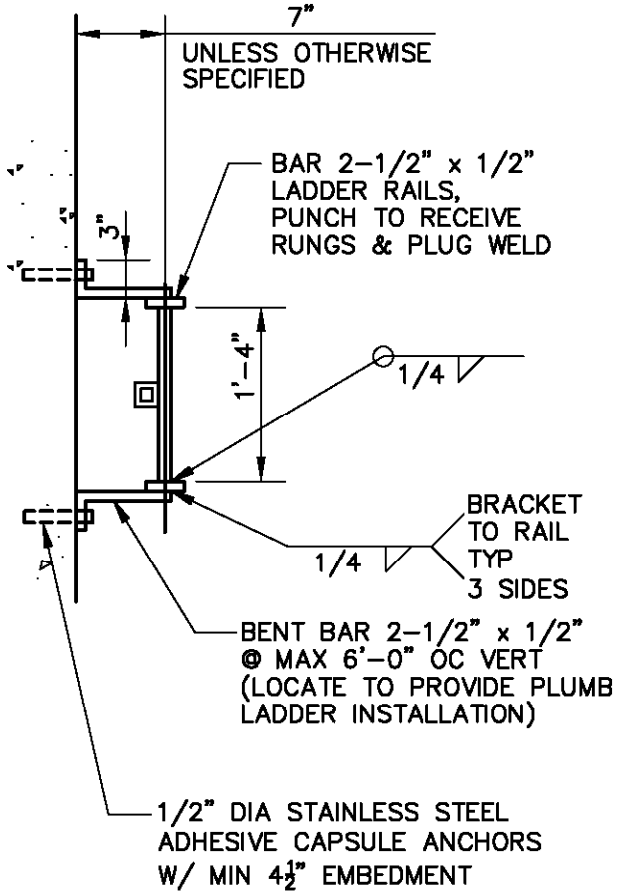

LADDER PLAN

NOTES:

1. HOT DIP GALVANIZE CARBON STEEL LADDER AFTER FABRICATION.
2. SAFETY POST SHALL BE BILCO LADDERUP (OR EQUAL), MODEL LU-4 (ALUMINUM) OR LU-3 (STAINLESS STEEL) AS APPLICABLE. SEE NOTE 4.
3. SAFETY POST SHALL EXTEND 42" MIN ABOVE STANDING PLATFORM.
4. ALL MATERIAL SHALL BE STAINLESS STEEL, INCLUDING LADDER COMPONENTS AND SAFETY POST WHEN INSTALLED INSIDE RESERVOIR/TANK OR AS SHOWN ON THE DRAWINGS.

LADDER ELEVATION

REVISION	DATE	BY	DESCRIPTION
4	03/06	P&I	GENERAL
5	04/06	P&I	GENERAL
6	12/06	P&I	GENERAL

APPROVED Susan Mulligan Digitally signed by Susan Mulligan DN: cn=Susan Mulligan, c=US Date: 2006.12.11 10:06:22 -08'00'
MANAGER OF ENGINEERING DATE

CALLEGUAS MUNICIPAL WATER DISTRICT
THOUSAND OAKS CALIFORNIA

STANDARD DRAWINGS
LADDER WITH SAFETY POST

DWG NO
705