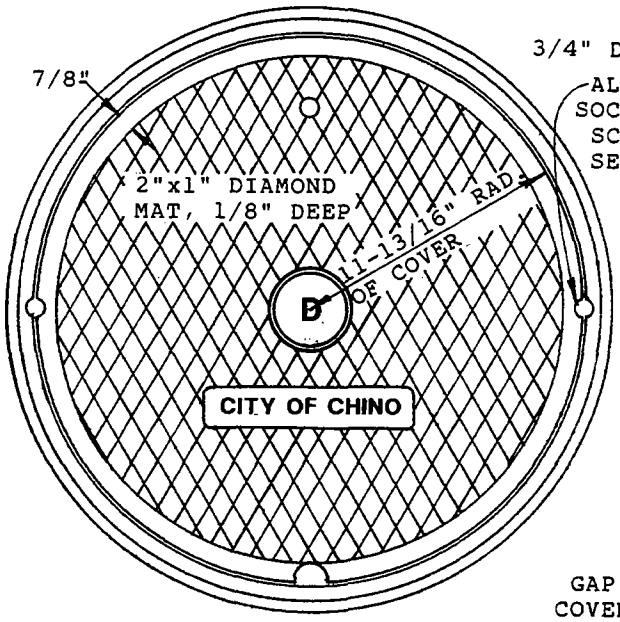

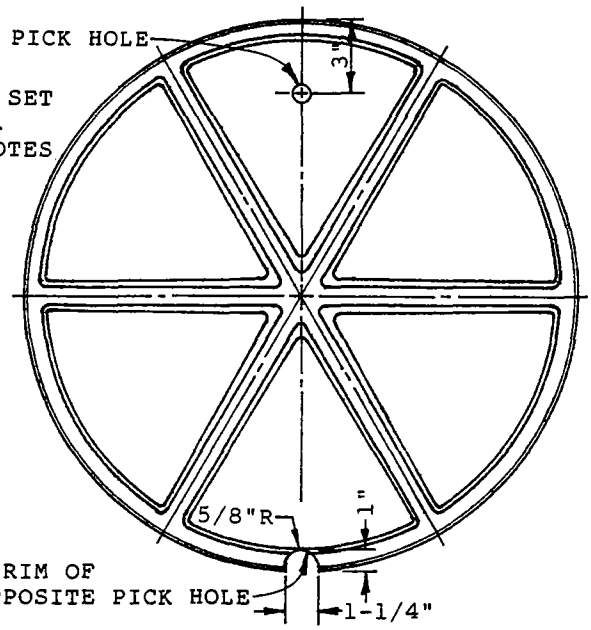

TOP OF MANHOLE FRAME & COVER

BOTTOM OF MANHOLE COVER

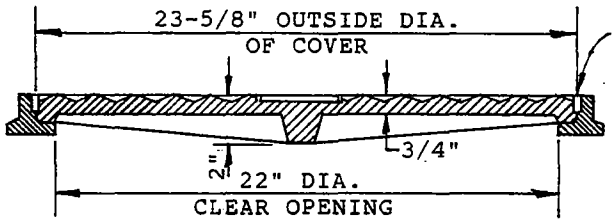

CROSS SECTION THRU FRAME & COVER

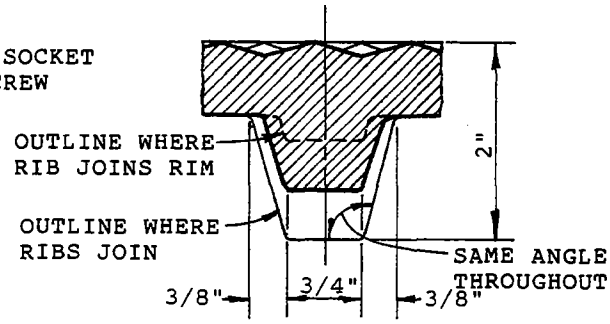

CROSS SECTION THRU RIB AT MID RADIUS

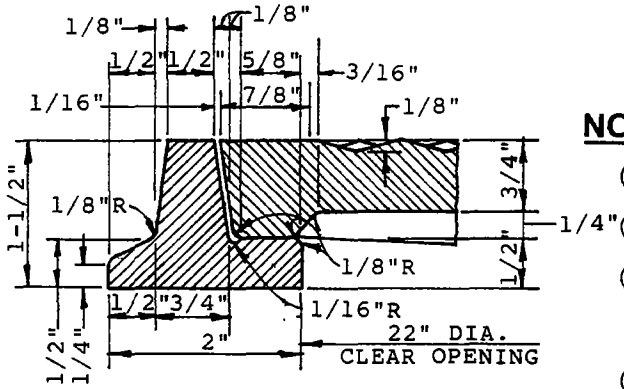

CROSS SECTION THRU RIM

NOTES:

1. Manhole frame and cover shall be Alhambra Foundry No. **A-1170** or approved equivalent.
2. Manhole frame and cover shall conform to Class 35 Serial No. A-48 of A.S.T.M.
3. Manhole covers shall be marked as follows: D=Storm Drain, and "CITY OF CHINO" shall be denoted clearly as shown on this standard.
4. Install 2(two) 3/4"x3/4" Allen socket set screws 90° to pick hole, in holes drilled and tapped 1" in depth.
5. All parts of the frame and cover except machined surfaces shall be coated with asphaltum paint.

APPROVED [signature] 1-28-99
CITY ENGINEER DATE

CITY OF CHINO
PUBLIC WORKS DEPARTMENT

DATE	REVISION	BY	STANDARD DRAWING	No.
			STORM DRAIN MANHOLE	345