DIST	COUNTY	ROUTE	KILOMETER POST TOTAL PROJECT	SHEET No	TOTAL SHEETS
07	LA	91	24.82	15	15

Caltrans Metric

Dah-Uei Yee 05-16-07
REGISTERED CIVIL ENGINEER DATE

PLANS APPROVAL DATE

REGISTERED PROFESSIONAL ENGINEER DAH-UEI YEE No. C61029 Exp. 12-31-08 CIVIL STATE OF CALIFORNIA

The State of California or its officers or agents shall not be responsible for the accuracy or completeness of electronic copies of this plan sheet.

M&E/DMJM HARRIS Joint Venture
515 South Flower Street 9th Floor
Los Angeles, CA 90071

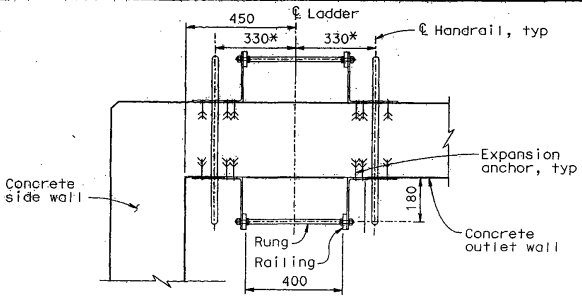

PLAN

* See Note 5

NOTES:

1. The distance between rungs shall not exceed 300 mm and shall be uniform throughout the length of wall.
2. The ladder may be constructed in one length at the Contractor's option. When ladder rails need to be spliced see Standard Plan D75C for Ladder Splice Plate details.
3. Hardware shall be galvanized after fabrication.
4. Grind exposed corners 5 mm radius.
5. The ladder handrails shall be positioned and installed through the gaps between bearing bars of modified grating panels with the spacing of 660 mm approximately to each other and 330 mm approximately to centerline of the ladder as shown in the details.

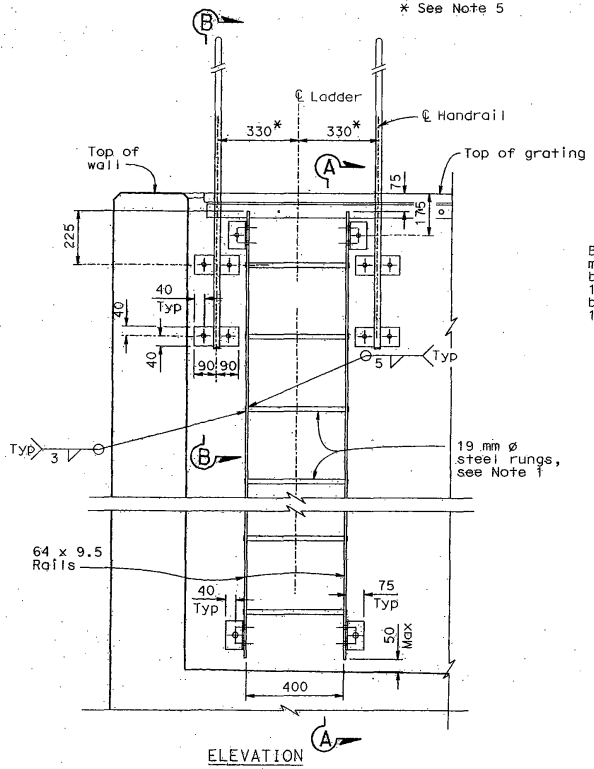

ELEVATION

LADDER DETAILS

1:10

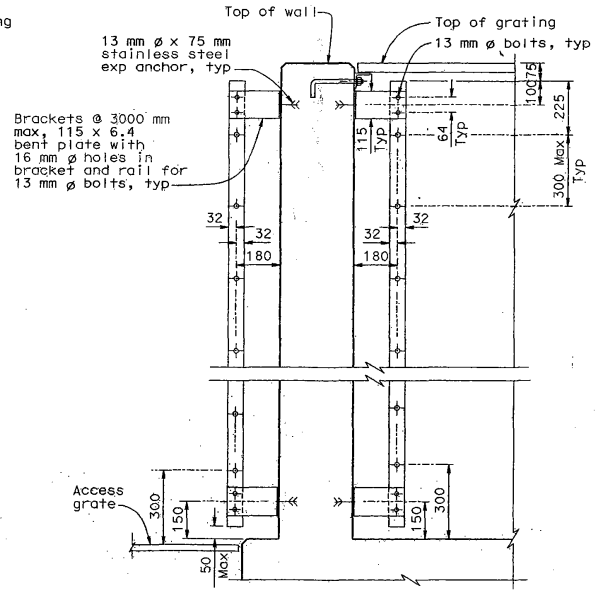

NOTE: Handrail not shown for clarity.

SECTION A - A

1:10

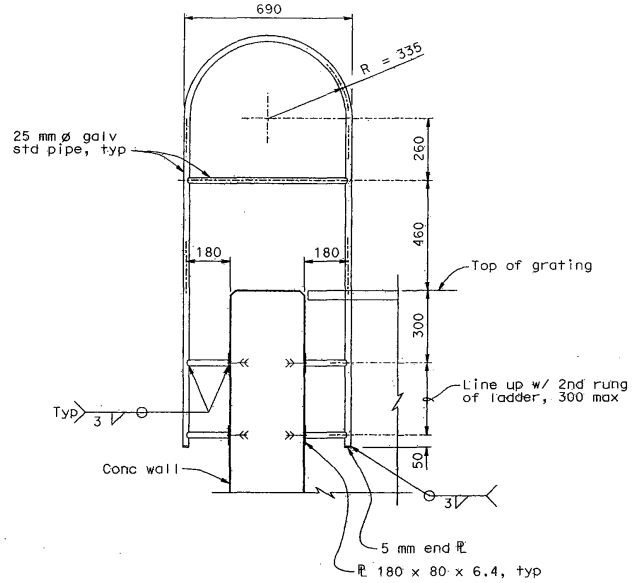

SECTION B - B

1:10

THE CONTRACTOR SHALL VERIFY ALL CONTROLLING FIELD DIMENSIONS BEFORE ORDERING OR FABRICATING ANY MATERIAL.

BID SET

ALL DIMENSIONS ARE IN MILLIMETERS UNLESS OTHERWISE SHOWN

D. FORESTER
DESIGN OVERSIGHT
5/22/07
SIGN OFF DATE

	BY	CHECKED
DESIGN	M. Aguilar / D. Yee	D. DeVera
DETAILS	B. Sistrunk	D. DeVera
QUANTITIES	M. Aguilar	D. DeVera

PREPARED FOR THE STATE OF CALIFORNIA DEPARTMENT OF TRANSPORTATION

Androush Danielians
PROJECT ENGINEER

BRIDGE NO.
KILOMETER POST

SR91/ARDMORE AVE GSRD
LADDER DETAILS

DESIGN DETAIL SHEET (METRIC) (REV. 3/1/98)

ORIGINAL SCALE IN MILLIMETERS FOR REDUCED PLANS 0 10 20 30 40 50 60 70 80 90 100

CU
EA

DISREGARD PRINTS BEARING EARLIER REVISION DATES

REVISION DATES (PRELIMINARY STAGE ONLY) 4/12/06 5/16/06

SHEET 11 OF 1

FILE => G:\Projects\60004459\TO-12-Ardmore_GSRD\cadd\Struct\Sheet\S-11.dgn