NO.	REVISIONS	APPROVED	DATE

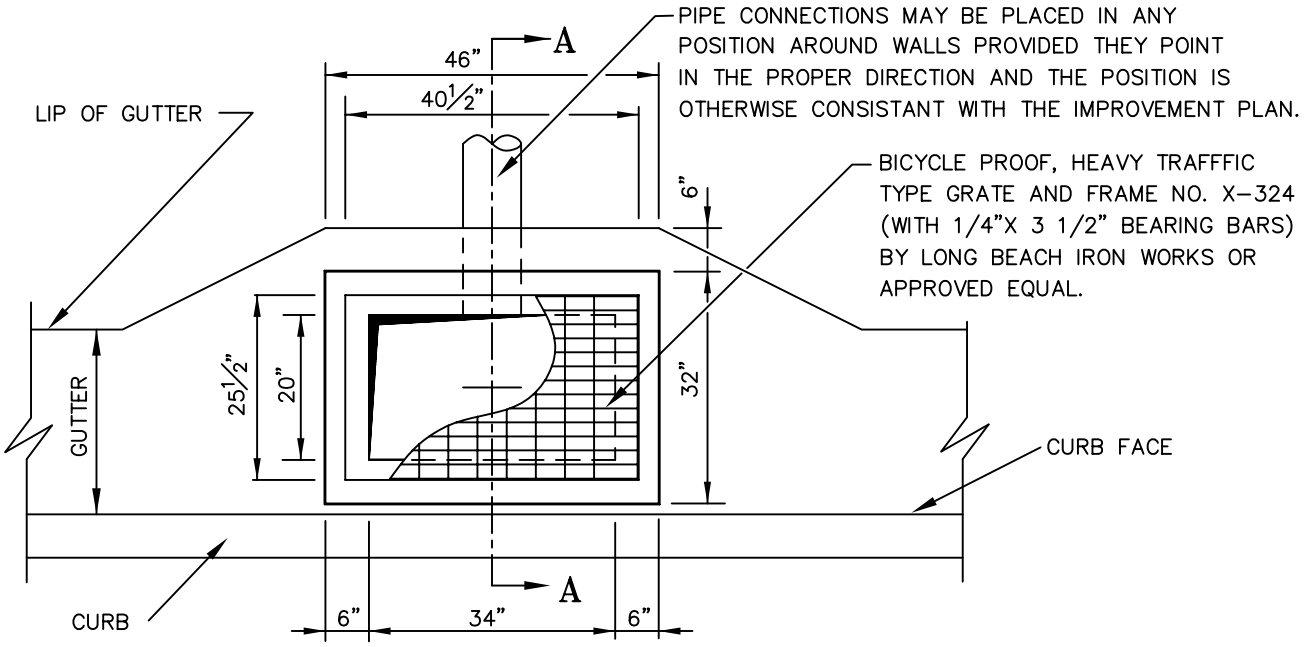

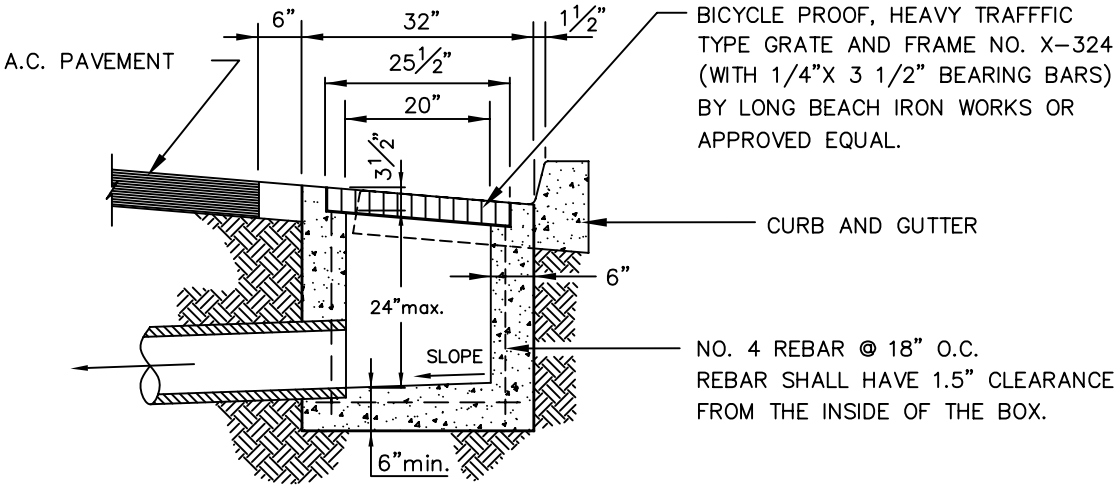

CROSS SECTION A-A

NOT TO SCALE

NOTE:

CLASS 560-C-3250 PORTLAND CEMENT CONCRETE SHALL BE USED, IN ACCORDANCE WITH THE STAND. SPECIFICATIONS FOR PUBLIC WORKS CONSTRUCTION.

CITY OF PALM SPRINGS PUBLIC WORKS & ENGINEERING DEPARTMENT	APPROVED:	DATE:	
	CITY ENGINEER		28931 R.C.E.
NUISANCE WATER DRAIN	DRAWN BY: G.F.F.	FILE NO.	STANDARDS
	CHECKED BY: M.L.F.	DWG. NO.	710