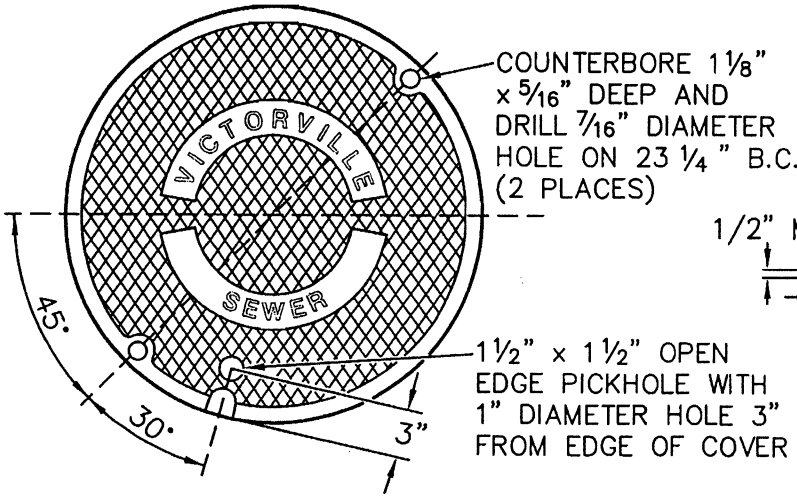

PLATEN COVER TOP VIEW

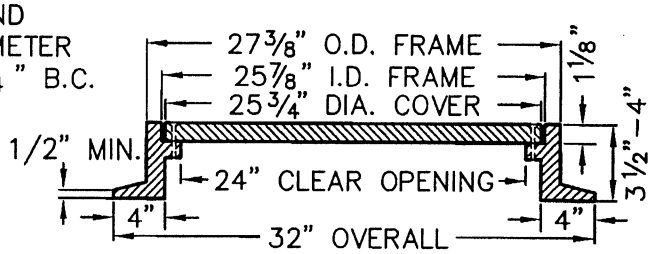

SECTION A–A

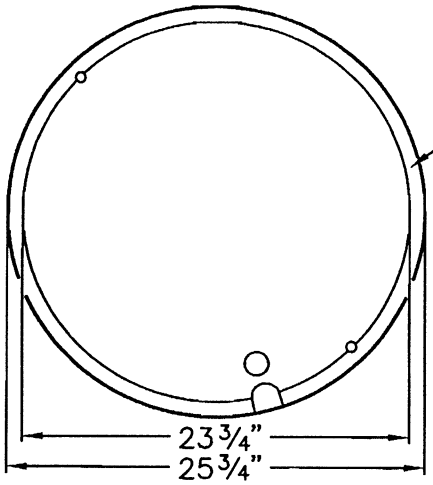

PLATEN COVER BOTTOM VIEW

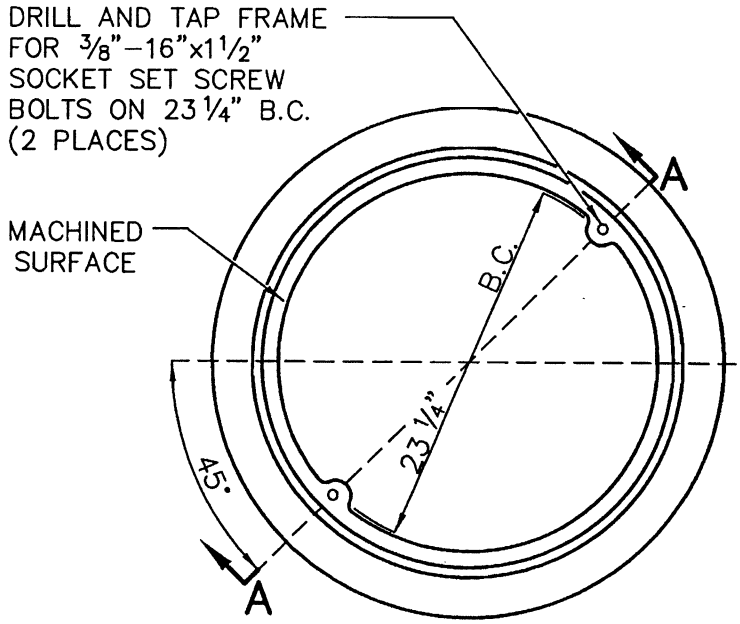

PLAN OF FRAME

NOTES:

1. MANHOLE FRAME AND COVER TO BE MANUFACTURED FROM CLASS 35 CAST IRON PER ASTM A–48.
2. FRAME AND COVER SHALL BE CAPABLE OF SUPPORTING H–20 WHEEL LOADING.
3. COVER SHALL HAVE CAST INTO TOP IN 1" HIGH MINIMUM BLOCK LETTERS "VICTORVILLE" OR "CITY OF VICTORVILLE" AND "SEWER". MANUFACTURER'S NAME OR INSIGNIA SHALL BE CAST INTO BOTH FRAME AND COVER.
4. MACHINE MATING SURFACES OF FRAME AND COVER TO PROVIDE UNIFORM EDGE SUPPORT FOR COVER.
5. PAINT FRAME AND COVER WITH BLACK BITUMINOUS PAINT.
6. APPROVED SUPPLIERS: ALHAMBRA FOUNDRY #1254, NEENAH FOUNDRY #R–1593 AND SOUTH BAY FOUNDRY #SBF1253B.

APPROVED BY CITY ENGINEER		CITY OF VICTORVILLE - ENGINEERING DEPARTMENT	
DATE	INITIALS	SANITARY SEWER 24" MANHOLE FRAME AND COVER	SS-02
12/1/08	J. McGlade	JOHN A. McGLADE, CITY ENGINEER	SHEET 1 OF 1