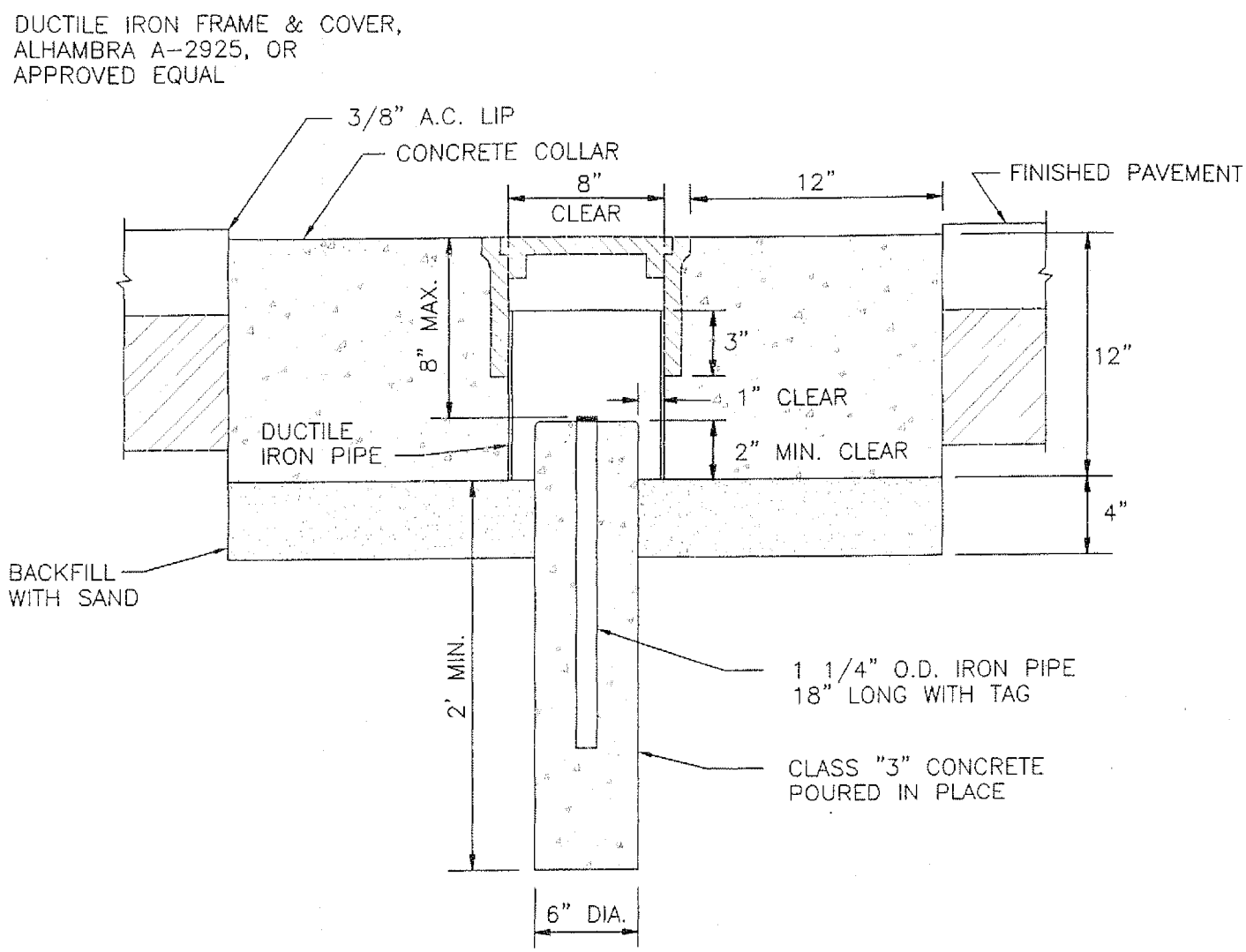

NOTES:

1. THE PERMANENT STREET MONUMENT SHOWN HEREON IS TO BE INSTALLED AT INTERSECTIONS OF MASTER PLANNED STREETS.
2. ALL OTHER STREET INTERSECTIONS AND CURVE REFERENCE POINTS SHALL BE RIVERSIDE COUNTY TYPE "B" COPPERWELD MONUMENTS SET FLUSH ON FINISH PAVING.
3. CROSS-GUTTER AND SPANDREL SHALL BE CONSTRUCTED OF CLASS "3" CONCRETE WHICH SHALL ATTAIN A 28 DAY COMPRESSIVE STRENGTH OF 4000 PSI IN ACCORDANCE WITH ASTM C39/C39M-99 AND SHALL CONTAIN 1-1/2 LBS. POLYPROPYLENE FIBER PER CUBIC YARD. POLYPROPYLENE FIBER BY FIBERMESH CO., FORTA MONO, O.A.E.

REGISTERED PROFESSIONAL ENGINEER
ROBERT K. HOLT
No. 27943
Exp. 3-31-02
CIVIL
STATE OF CALIFORNIA

APPROVED: PUBLIC WORKS DIRECTOR
James W. Rodkey Jr. DATE 9/7/00
JAMES W. RODKEY, JR.

APPROVED: CITY ENGINEER
Robert K. Holt DATE 8/31/00
ROBERT K. HOLT, P.E.

CITY OF
BLYTHE

SURVEY MONUMENT

STANDARD DRAWING NO. S-219